LGD56Y64G02 (640(RGB)X480 DOTS TFT LCD)

1.DIMENSION OUTLINE

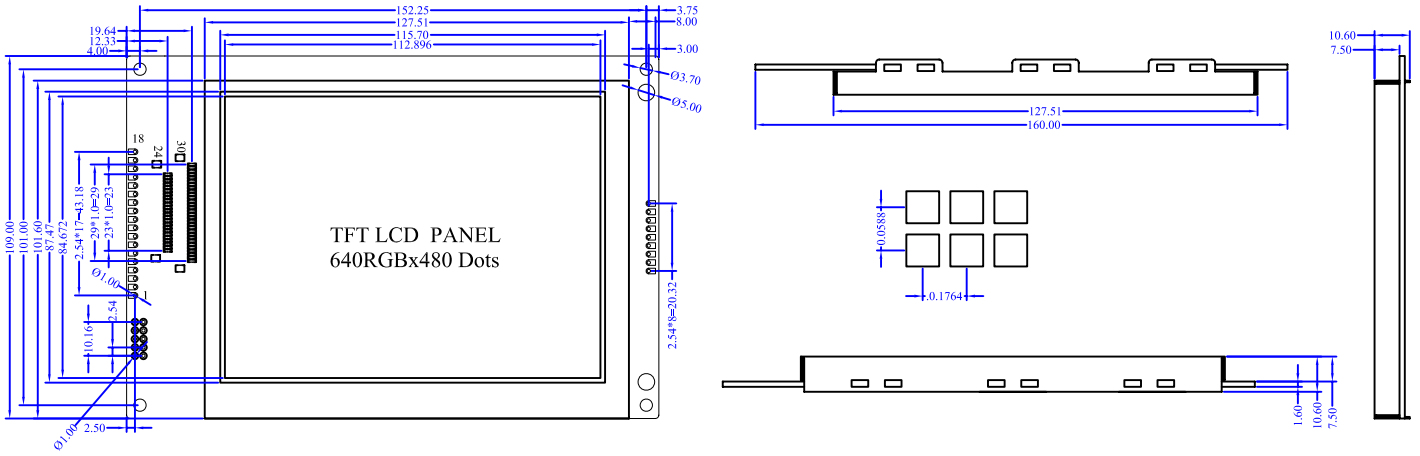

2.MECHANICAL SPECIFICATIONS

ITEM	SPECIFICATIONS	ITEM	REMARK
Module Size(L×W×H)	160.0×109.0×11.0	mm	Reference Dimensional Outline
View Area(W×H)	115.70×87.47	mm	
Effective V/Area	112.896×84.672	mm	
Number of Characters	640(RGB)×480	-	
Dot Pitch(W×H)	0.12×0.36	mm	
Dot Size(W×H)		mm	

3.ABSOLUTE MAXIMUM RATINGS

ITEM	SYMBOL	CONDITION	STANDARD	
			MIN	MAX
Logic Voltage	VCC	Ta=25℃	-0.3V	6.5V
LCD Voltage	VLCD		-0.3V	45V
Input Voltage	AVDD		-0.3V	6.5V
Operation Temperature	TOP	—	-20℃	70℃
Storage Temperature	TSt	—	-30℃	80℃

4.BLOCK DIAGRAM MECHANICAL

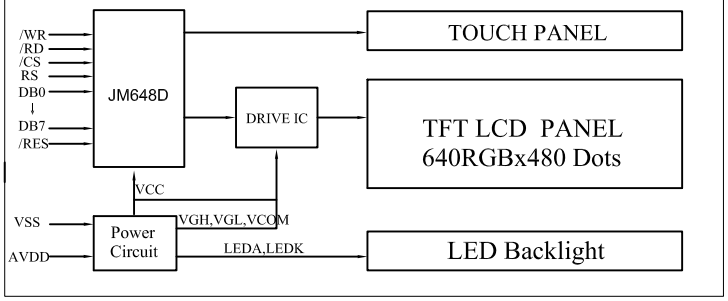

5.LED BACKLIGHT SPECIFICATIONS

ITEM	SYMBOL	TYPE	MAX	UNIT
Ta=25℃				
Forward Voltage	Vf	9.0	9.3	V
Forward Current	If	100	—	mA
Emission Vave Length	λP	White	—	nm

7.ELECTRICAL CHARACTERISTICS

ITEM	SYMBOL	MIN	TYPE	MAX	UNIT
Ta=25℃					
Logic Power	VCC	3.0	3.3	3.6	V
Input High Voltage	VIH	0.8VCC	—	VCC	V
Input Low Voltage	VIL	0	—	0.2VCC	V
Output High Voltage	VOH	VCC-0.4	—	VDD	V
Output Low Voltage	VOL	0	—	0.4	V
Logic Current	IDD	—	—	300	mA
Operation Voltage For LCD	VGH-VGL	—	45	—	V

6.INTERFACE PIN CONNECTIONS

ITEM(JP1)	SYMBOL	LEVEL	FUNCTIONS
1	GND	0V	Power Ground
2	VCC	+5V	Power supply for logic
3	NC	—	No Connection
4	/WR	L	Write signal
5	/RD	L	Read signal
6	/CS	L	Chip enable signal
7	RS	H/L	H:command L:data
8	/REST	L	Reset signal
9-16	D0-D7	H/L	In 8-bit parallel:DB0-DB7 In 16-bit parallel:DB0-DB7
17	EAIT	H/L	Busy State
18	INT	H/L	The Interrupt signal

ITEM(JP3)	SYMBOL	LEVEL	FUNCTIONS (external Controller)
1	GND	0V	Power Ground
2	VCC	+5V	Power supply for logic
3	SCL	+5V	SPI Colock
4	SD1	H/L	SPI Date Input
5	SDO	H/L	SPI Date Output
6	SCS	H/L	SPI Chip Select
7	/RST	L	Reset signal
8	WAIT	H/L	Busy State
9	INT	H/L	The Interrupt signal

ITEM(JP3)	SYMBOL	LEVEL	FUNCTIONS (external Controller)
1	KIN0	H/L	Keypad Date Line Or GPIs
2	KOUT0	H/L	Keypad Strobe Line Or GPOs
3	KIN1	H/L	Keypad Date Line Or GPIs
4	KOUT1	H/L	Keypad Strobe Line Or GPOs
5	KIN2	H/L	Keypad Date Line Or GPIs
6	KOUT2	H/L	Keypad Strobe Line Or GPOs
7	KIN3	H/L	Keypad Date Line Or GPIs
8	KOUT3	H/L	Keypad Strobe Line Or GPOs